1860, 1863
(WALL BRACKET - STANDARD TWO PIECE)

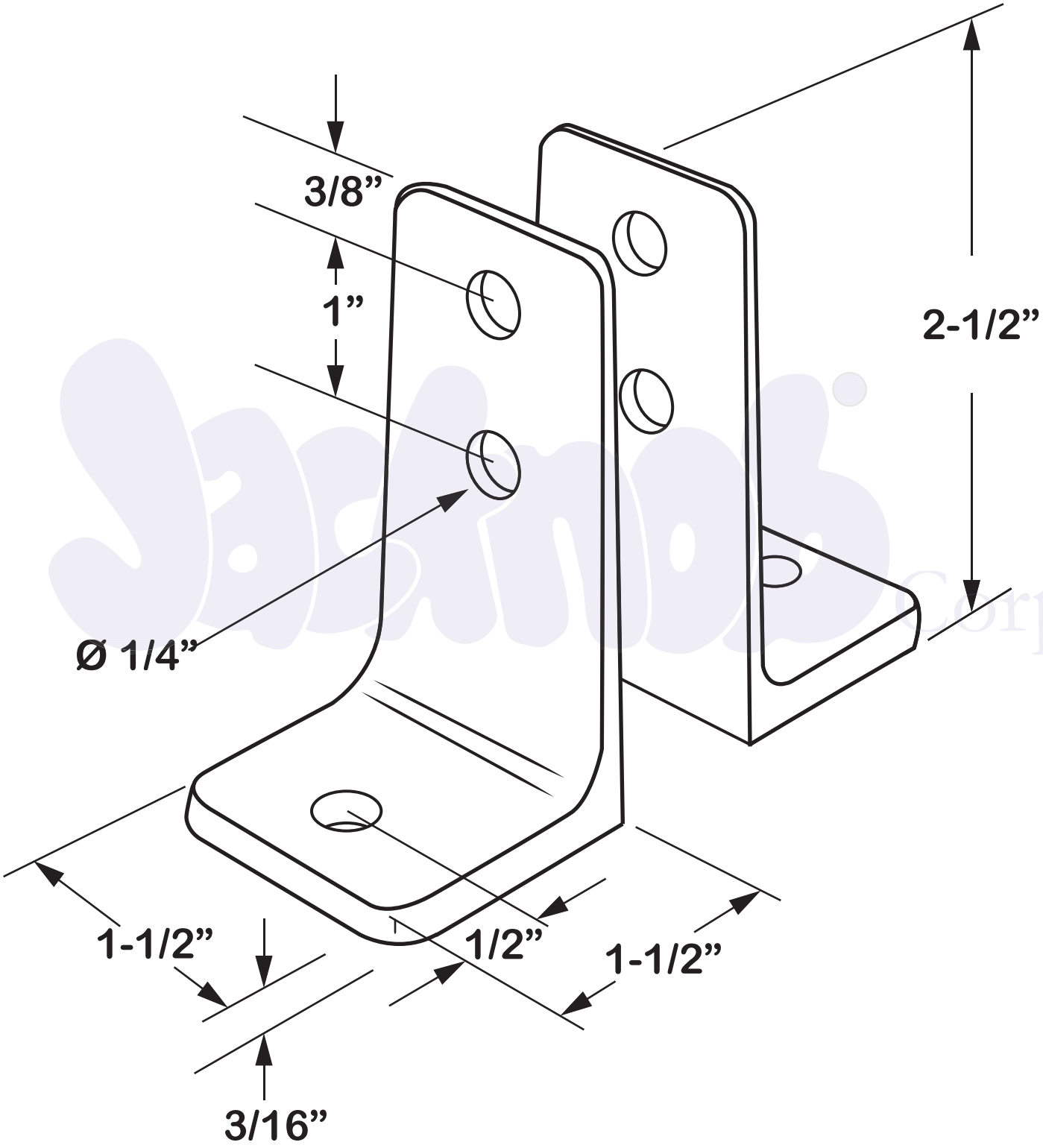

Copyright - 2023 Jacknob Corp. All rights reserved
All dimensions shown are approximate. Do not pre-drill or fabricate based on dimensions shown.
The manufacturer reserves the right to, and may from time to time, make changes in dimensions and designs.